ULTRA-ZONE®
Forced Air Zone Controls

APPLICATION NOTE
Model *RD-HD, SID-HD, ND-HD*
Bypass Volume Control Hand Damper

Pursuant to ACCA Manual Zr, install the Bypass Hand Damper in a convenient location on the bypass duct *before or after* the actual bypass damper. Allow at least 6 inches of clearance between both dampers. Secure the assembly with sheet metal screws and seal all connections. Insulate the entire bypass duct if necessary. Loosen the thumb screw on the manual quadrant and test to make sure the blade moves freely in both directions, then set the Bypass Hand Damper to the full open position. Follow the instructions below.

- ***If you have a Manometer*** *proceed to* ***"Adjusting the Bypass Hand Damper"*** *Follow the directions for setting the Bypass Hand Damper Delta P, based on the Delta P (Total ESP) across the HVAC system.*

- ***Setting the correct bypass differential pressure*** *will prevent the Bypass Duct from becoming the path of least resistance and helps to:*
  - **Eliminate DX coil freeze-up*
  - **Eliminate Over-Heating*
  - **Eliminate System Short Cycling*
  - **Eliminate ECM Fan Motor Hunting*
  - **Eliminate Bypass Damper Hunting*

- ***If you don't have a Manometer,*** *simply adjust the hand damper to the ½ closed position. EWC Controls recommends at least ½ closed because setting some value pressure drop is better than none at all.* See Figure 1.

- ***If during bypass mode,*** *the Zone system Trips excessively on the Supply air Sensor, you observe Excessive Condensation on the bypass duct or Air Handler, or you measure unusually low Differential Temperatures, then close the Hand Damper some more. If there is excessive noise through the bypass duct, then open the Hand Damper a little.*
- ***If you accidentally close*** *the Hand Damper, approximately 30% of the design bypass volume will still flow through the Hand Damper due to the truncated blade design. This unique design prohibits adversely affecting the blower motor curve.*

Adjusting the Bypass Hand Damper:
Before adjusting the hand damper, the installer should confirm the following:

(1) The zone system and all zone dampers are functioning properly.
(2) The HVAC System is functioning properly in highest (CFM) speed.
(3) Make sure all zone dampers are open and the Barometric or Electronic Bypass damper is fully closed.
(4) Make sure the air filter is new or clean.

See Figure 2:
EXAMPLE - Measure the HVAC system Differential Pressure **(Delta P) with all zones calling and the bypass fully closed.**
1. Measure the static pressure at the Supply Plenum (0.16"wc)
2. Measure the static pressure at the Return Plenum (-0.35"wc)
3. Observe the Delta P readout on the Manometer. ***(0.51"wc)***
4. Or solve for Delta P = 0.16 - (-0.35) = ***0.51"wc*** ***(Delta P Target to Match)***

See Figure 3:
EXAMPLE - Measure the HVAC system Differential Pressure **(Delta P) in the worst case scenario (smallest zone calling and all other zones closed). Bypass damper is forced open and the Hand damper is open.**
1. Measure the static pressure at the Supply Plenum (0.29"wc)
2. Measure the static pressure at the Return Plenum (-0.15"wc)
3. Observe the Delta P readout on the Manometer. ***(0.44"wc)***
4. Or solve for Delta P = 0.29 - (-0.15) = ***0.44"wc Delta P*** ***(NO MATCH)***

Adjust the Hand Damper (towards the closed position) and keep adjusting until the Delta P readout on the Manometer reads the same or close to the 0.51"wc target above.

EXAMPLE - Measure again.
1. Measure the static pressure at the Supply Plenum (0.22"wc)
2. Measure the static pressure at the Return Plenum (-0.29"wc)
3. Observe the Delta P readout on the Manometer. ***(0.51"wc)***
4. Or solve for Delta P = 0.22 - (-0.29) = ***0.51"wc Delta P*** ***(Matches Target)***

You are finished. *Lock the Hand Damper in place. Release all forced Zone dampers and place the Zone system and Thermostats back to normal operation.*
NOTE: Values provided above are examples only. Your actual pressure readings will vary, but the procedure will always be the same.

Figure 1

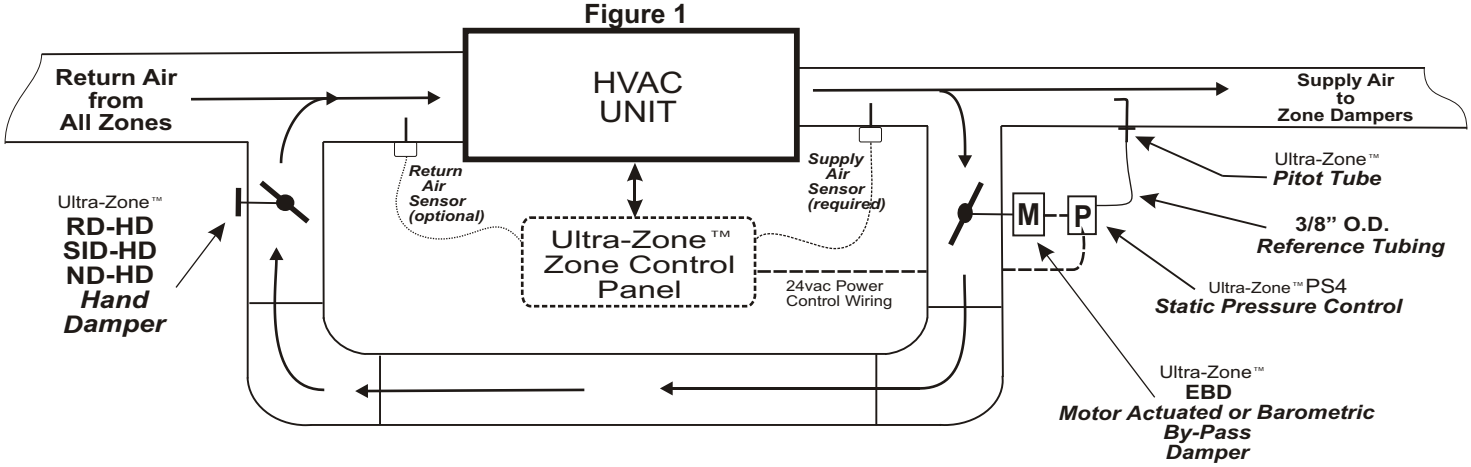

Note: This EWC drawing of the Bypass damper, Hand Damper, Static Pressure control and Related duct work is intended to serve only as a guide. Your actual duct work layout may differ. Use the graphic as a guide when planning or designing a Zone system regardless of the Equipment type, Duct layout and Airflow configuration.

EWC CONTROLS, LLC.
385 Hwy. 33 Englishtown, NJ 07726
Ph: 800-446-3110 - Fx: 732-446-5362

P/N 090376A0169 REV. G 09.24.24

STEP 1: Place the system into single zone scenario. (All zones are calling and the bypass is closed). *If necessary, use the hand damper to close-off the bypass completely.* Observe the Total ESP value at the bottom of the Manometer or do the math yourself. Record the value. That value is now the target

Example values
Your values will vary

Figure 2

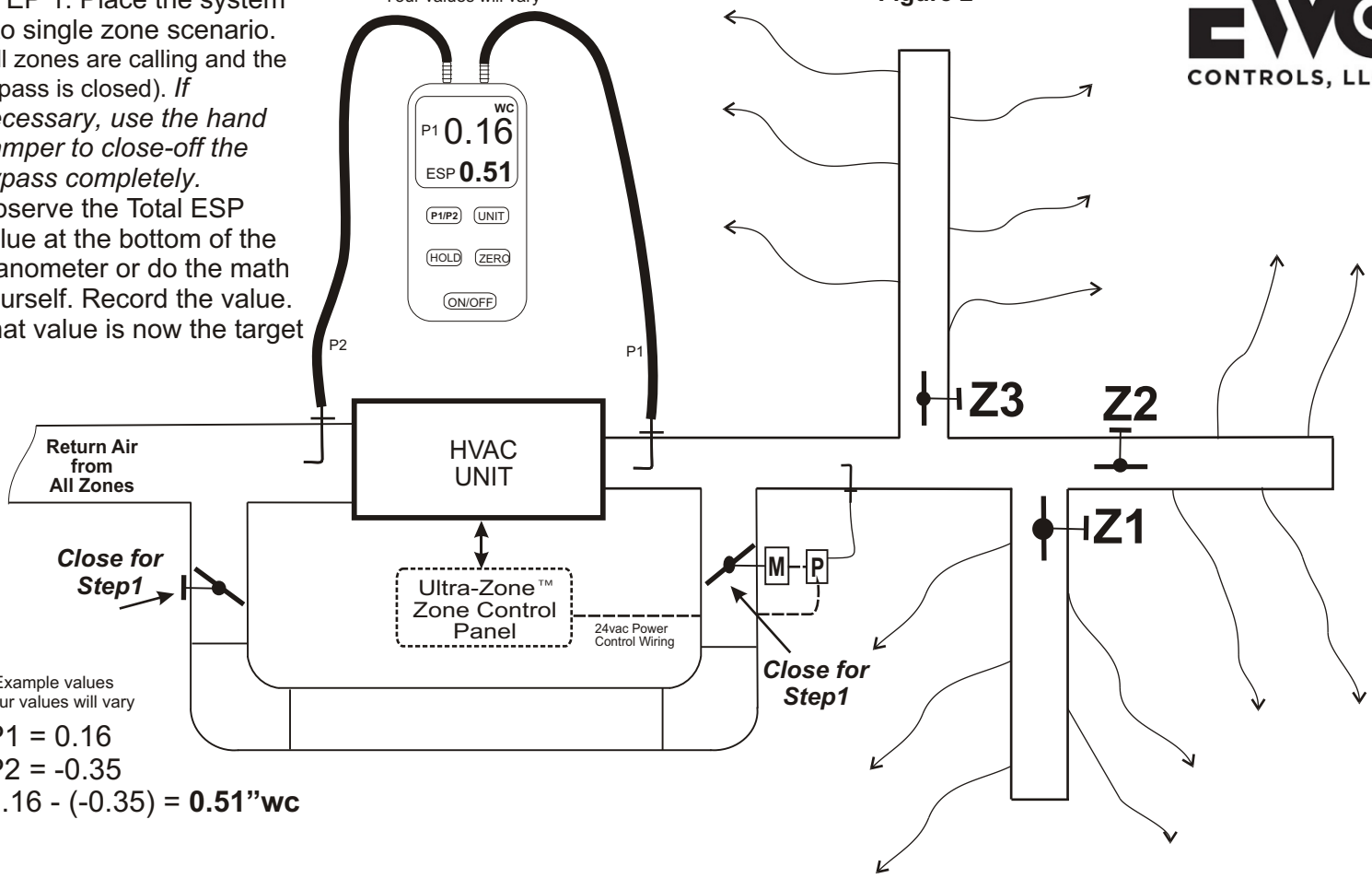

Example values
Your values will vary

P1 = 0.16
P2 = -0.35
0.16 - (-0.35) = **0.51”wc**

STEP 2: Place the system into worst case scenario. (Smallest zone calling, all other zones closed). *Force the bypass damper to The full open position & open the hand damper as well.* Start closing the bypass hand damper until the Delta P value matches the target value obtained in Step #1. When finished, lock it down and place the system back to normal operation.

Figure 3

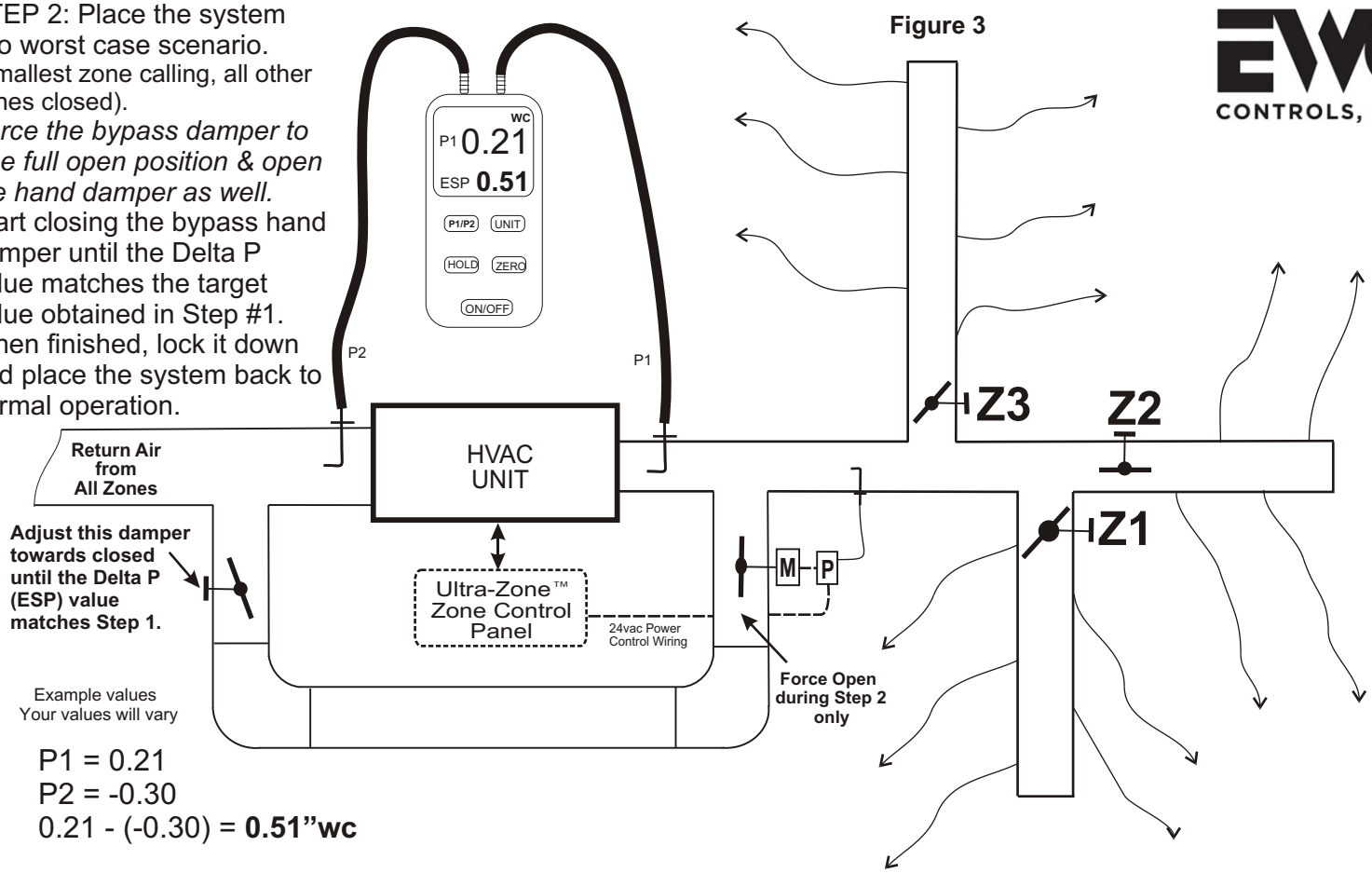

Example values
Your values will vary

P1 = 0.21
P2 = -0.30
0.21 - (-0.30) = **0.51”wc**

P/N 090376A0169 REV. G 09.24.24